BEFORE YOU BEGIN

Opal Bridge Kitchen Faucet

Unlacquered Brass

Traditional lever handles • Matching side sprayer included

Installation	Deck-mounted bridge; 4 mounting holes
Hole diameter	1-3/8 in. each (approximately 35 mm)
Faucet hole centers	4 in. + 4 in. = 8 in. overall
Overall faucet height	9.5 in.
Spout reach	8 in.
Side sprayer height	6 in.
Flow rate	1.8 GPM (6.8 L/min) at 60 PSI

Measure the actual faucet and mounting hardware before drilling. Check clearance for both handles, spout rotation and free movement of the sprayer hose below the sink.

Tools & preparation

Adjustable wrench, tape measure, safety glasses, soft cloth and a bucket. Use surface-compatible neutral-cure silicone only if required by the mounting surface and supplied seals.

Start with the water off

Close both hot and cold shutoff valves. Open the old faucet to relieve pressure, then disconnect it. Clean and dry the mounting surface. Inspect the supplied parts and protect the brass finish while working.

MOUNTING

Install the faucet & sprayer base

01 Secure the bridge faucet

Position the faucet through the three faucet holes. Keep the center support seated flat and align the spout over the sink. Fit the supplied seals, washers and mounting nuts in their supplied order. Tighten evenly from below without overtightening.

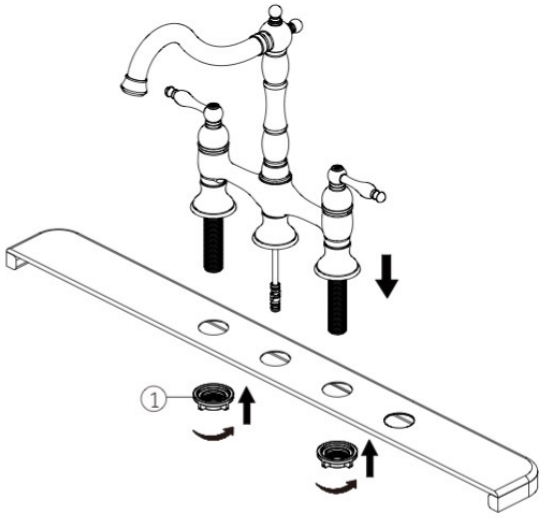

02 Fit the side sprayer base

Place the sprayer flange through the fourth hole. Install its supplied seal and mounting nut from below. Align the base, then hand-tighten securely. Leave room for the sprayer to lift out freely.

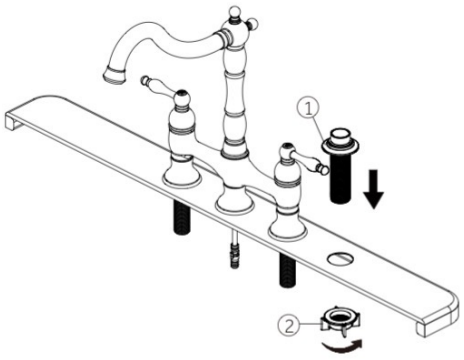

CONNECTIONS

Connect the hose & water supplies

03 Connect the side sprayer

Feed the sprayer hose down through its base. Connect it to the faucet's designated sprayer outlet using the supplied connector. Route the hose in a smooth loop, clear of valves and stored items so it moves without kinks or snags.

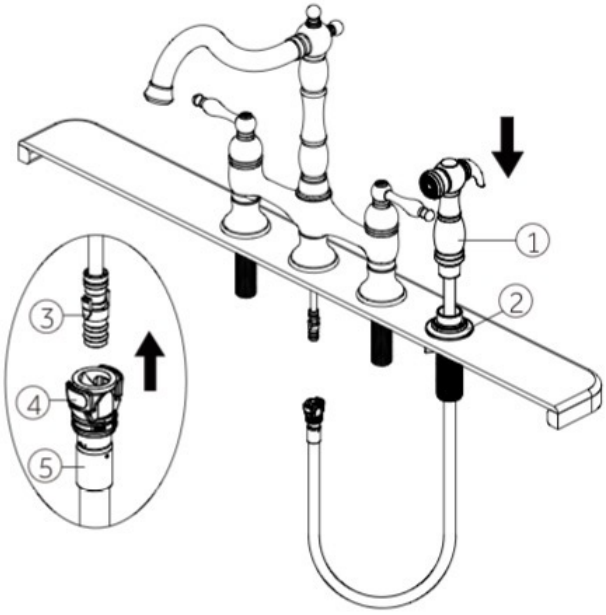

Match the supplied connection

If a quick connector is supplied, align it, push until it locks and gently pull to confirm engagement.

If a threaded connection is supplied, seat its washer and tighten as directed for that fitting. Do not force mismatched parts.

04 Connect hot & cold water

Connect the hot and cold supply hoses to the matching faucet inlets and shutoff valves. For the supplied US hoses, the shutoff connection is 3/8 in. compression. Hold the mating fitting while tightening to avoid twisting the hoses.

Connection check

Use the seals intended for each fitting. Do not apply thread tape to compression, gasket-sealed or quick-connect joints. Connect the sprayer only to the faucet's sprayer outlet.

COMMISSIONING & CARE

Flush, check & enjoy

05 Flush the faucet

Remove the aerator and keep its gasket safe. Slowly open the shutoff valves. Run hot and cold water for at least one minute each to clear debris. Turn the faucet off, rinse the aerator and reinstall it with its gasket correctly seated.

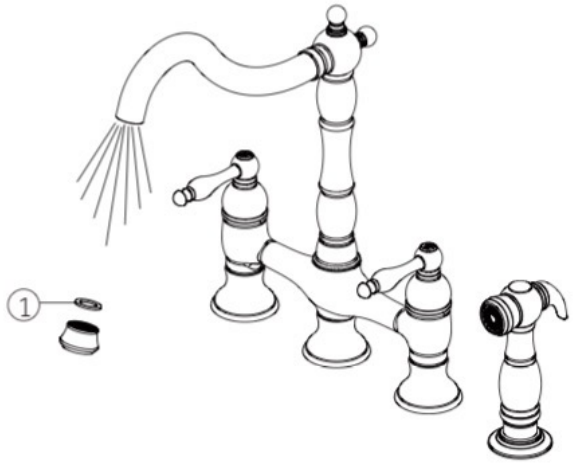

06 Test every connection

Run the faucet and operate the side sprayer. Inspect all connections above and below the sink, including the sprayer hose, with water running and after shutoff. If a leak appears, close the water supply and correct the connection before use.

Your natural living finish

Unlacquered brass changes naturally with use and develops a unique patina. Clean with mild soap and water, then dry with a soft cloth. Avoid abrasive pads, harsh chemicals and acidic cleaners.

Need assistance? Contact Brasslux at Contact@brasslux.com.
Installation illustrations are reference views. Use the hardware supplied with your faucet; connector appearance may vary.