SOLID BRASS BAR SINK

SKU: BR004SK-RNDBR-1

Size: 14" x 7"

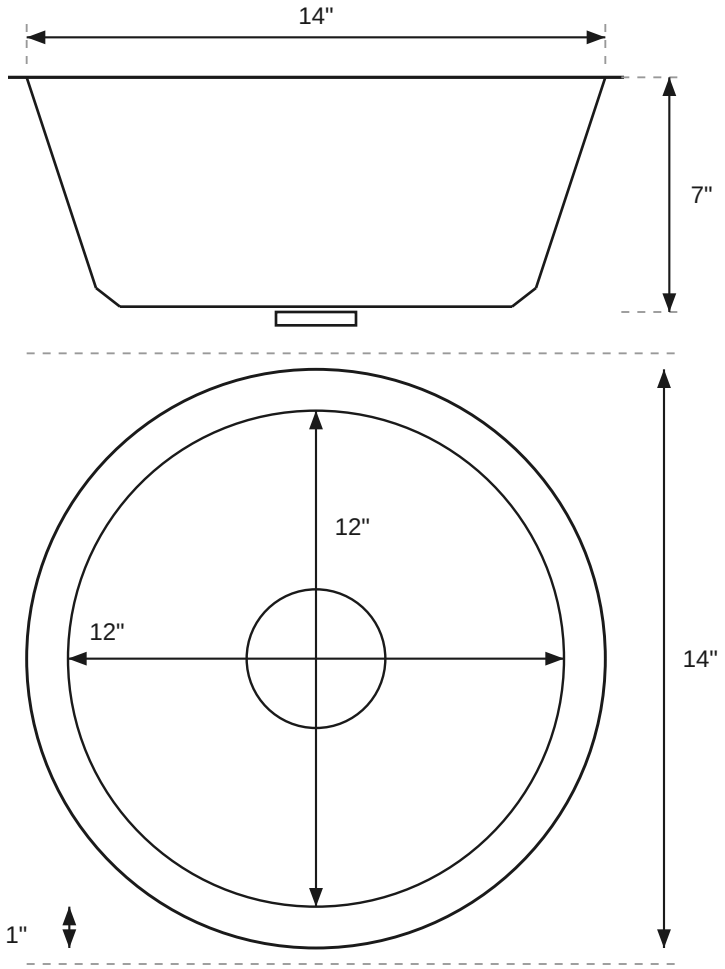

FEATURES

- Material: Solid Brass
- Finish: Polished Unlacquered Brass
- Shape: Round
- Length: 14"
- Width: 14"
- Height: 7"
- Basin Length: 12"
- Basin Width: 12"
- Water Depth to Rim: 7"
- Rim Thickness: 1"
- Metal Gauge/Thickness: 16 Gauge
- Installation Type: Drop-In or Undermount
- Faucet Included: No
- Drain Included: No
- Drain Size: 3-1/2"
- Interior Treatment: Hammered

BRASSLUX
5-YEAR WARRANTY

See website for warranty information



All measurements are approximate. Measurements may vary +/- 1/4".

REVISED 10/18/2026

customer service: (925) 322-6444
brasslux.com

SOLID BRASS BAR SINK

SKU: BR004SK-RNDBR-3

Size: 16" x 7"

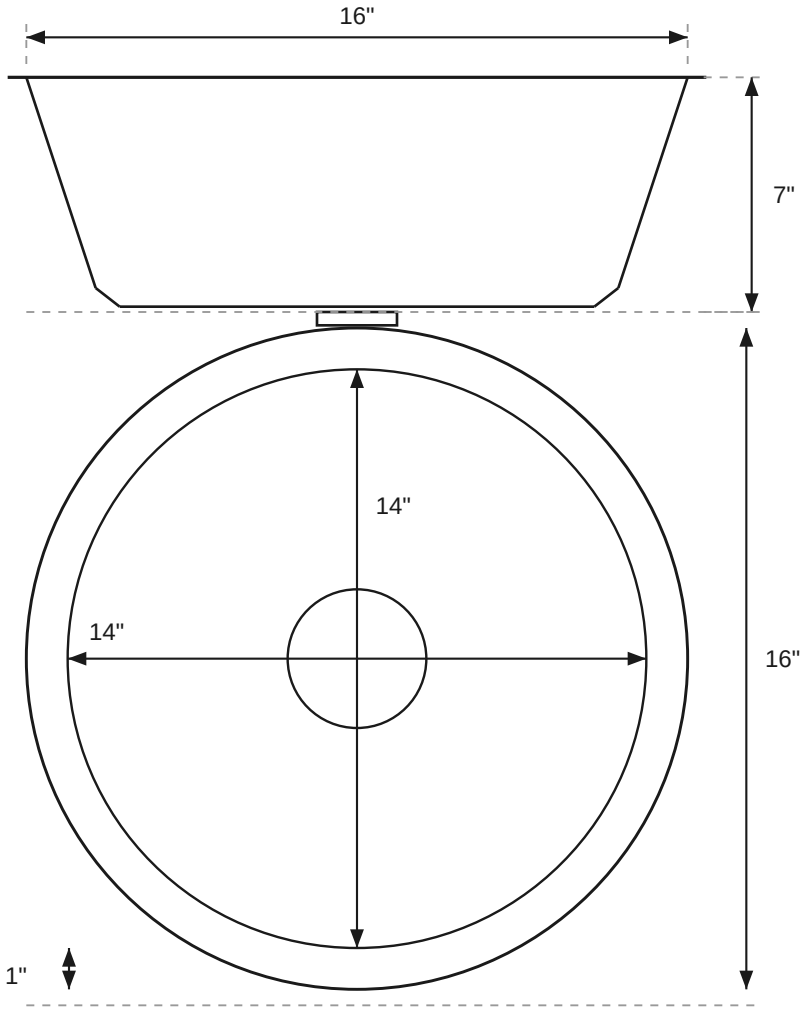

FEATURES

- Material: Solid Brass
- Finish: Polished Unlacquered Brass
- Shape: Round
- Length: 16"
- Width: 16"
- Height: 7"
- Basin Length: 14"
- Basin Width: 14"
- Water Depth to Rim: 7"
- Rim Thickness: 1"
- Metal Gauge/Thickness: 16 Gauge
- Installation Type: Drop-In or Undermount
- Faucet Included: No
- Drain Included: No
- Drain Size: 3-1/2"
- Interior Treatment: Hammered

BRASSLUX
5-YEAR WARRANTY

See website for warranty information



All measurements are approximate. Measurements may vary +/- 1/4".

REVISED 10/18/2026

customer service: (925) 322-6444
brasslux.com